ART PACKAGE SCHEDULE

MARK	QTY.	DESCRIPTION	FURNISHED BY:	PC CODE	REMARKS
GRAPHICS: ENTRYWAY					
E1	–	WELCOME CUSTOMER ENTRY DOOR	E&S	273243	
E2	–	STORE HOURS KIT	E&S	273244	
E3	–	WELCOME GLASS PARTITION WALL VINYL	E&S	273260	
E4	–	"NOW SERVING" OPEN PEEL SIGN	E&S	318555	
GRAPHICS: WALLPAPER					
W1	–	COLORED NEWSPRINT WALLPAPER #1	E&S	273204	48" WIDE x 132" TALL ROLLS (ALWAYS ORDER #1 FIRST)
W2	–	COLORED NEWSPRINT WALLPAPER #2	E&S	273205	48" WIDE x 132" TALL ROLLS
W3	–	COLORED NEWSPRINT WALLPAPER #3	E&S	273206	48" WIDE x 132" TALL ROLLS
W4	–	COLORED NEWSPRINT WALLPAPER #4	E&S	273207	48" WIDE x 132" TALL ROLLS
GRAPHICS: LOBBY WALLS					
L1	–	SIZE PIZZA PAN ART (SET OF 6)	E&S	273210	5'-2" AFF IF HUNG W/ HORIZONTAL ORIENTATION/ 3'-8" VERTICAL
L2	–	"CAUTION DELIVERY EXPERTS" DOOR VINYL	E&S	273217	USED IF GLASS DOOR SEPARATES LOBBY FROM PRODUCTION AREA
L3	–	"TRACK IT" DIMENSIONAL RIBBON	E&S	273214	7'-9" AFF TO BOTTOM OF LETTERS
L4	–	PIZZA PROVERB – CHALK WALL VINYL	E&S	273208	5'-1" AFF TO BOTTOM OF BRACKET
L5	–	MANAGER'S SPECIAL – CHALK WALL VINYL	E&S	273209	5'-1" AFF TO BOTTOM OF BRACKET
L6	–	4' CHALK TRAY	E&S	273027	4'-7" AFF ON CHALK WALL
L7	–	FRAMED PHOTO COLLAGE SET	E&S	273212	
L8	–	INGREDIENT PIZZA PAN ART	E&S	273211	5'-6" AFF TO CENTER OF ART
L9	–	PEPPER AND STUFFED CHEESY BREAD	E&S	273251	5'-6" AFF TO CENTER OF ART
L10	–	"90% OF FRANCHISEES	E&S	273252	
L11	–	RECESSED CHALK TRAY	CUSTOMER	E273035	
GRAPHICS: CUSTOMER VIEWING LEDGE					
V1	–	DIMENSIONAL LOGO AND BRAND STATEMENT WALL	E&S	273221/22	RED FOCAL WALL
V2	–	"HAND TOSSED" DOUGH VINYL	E&S	273223	SNEEZE GUARD IN FRONT OF DOUGH COUNTER
V3	–	"450 DEGREE TEMP" VINYL	E&S	273229	SNEEZE GUARD IN FRONT OF MAKELINE
V4	–	"PIZZA INSPECTOR" STEP-UP VINYL	E&S	273248	CHILD STEP
GRAPHICS: POS					
P1	–	"PICK UP" SOFFIT DIMENSIONAL LETTERS	E&S	273232	
P2	–	"ORDER" SOFFIT DIMENSIONAL LETTERS	E&S	273234	
P3	–	PROMO CHALKBOARD FOR POS COUNTER	E&S	273237	
P4	–	28" HIGH 3 PANEL MENU BOARD	E&S	273247	INSERTS SOLD SEPARATELY
GRAPHICS: RESTROOM					
R1	–	RESTROOM FRAMED ART SET (SET OF 2)	E&S	273242	ONE FOR EACH OPPOSITE BLUE WALL
R2	–	UNISEX RESTROOM SIGN	E&S	4040	
R3	–	WOMEN'S RESTROOM SIGN	E&S	4041	
R4	–	MEN'S RESTROOM SIGN	E&S	4042	
R5	–	"EMPLOYEES MUST WASH" SIGN	E&S	4043	REQUIRED BY SINK FOR CUSTOMER RESTROOM
GRAPHICS: CUSTOMER VIEWING LEDGE					
G1	–	"FIPIC FXTRAS" GRAPHIC FOR GRAB-N-GO UNIT	E&S	273238	

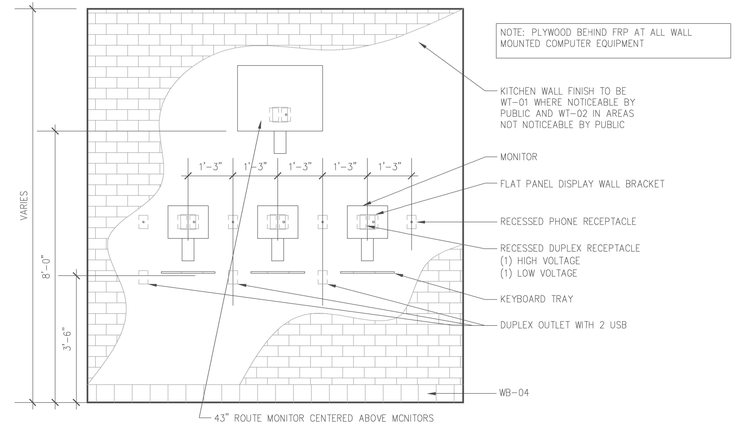

8 A2.1 ORDER STATION
SCALE: 1/2" = 1'-0"

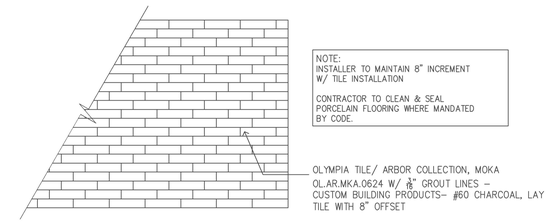

7 A2.1 LOBBY FLOOR TILE
SCALE: 1/4" = 1'-0"

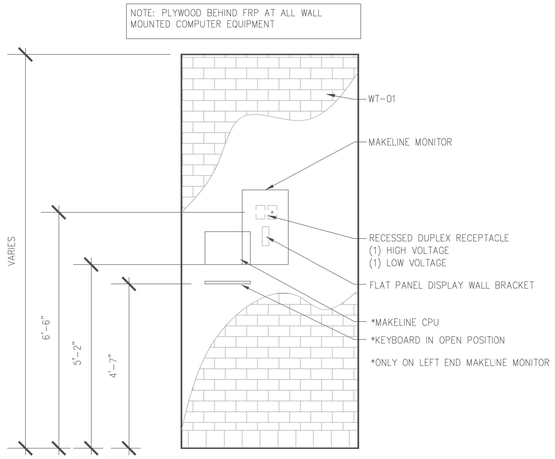

6 A2.1 MAKELINE MONITORS
SCALE: 1/2" = 1'-0"

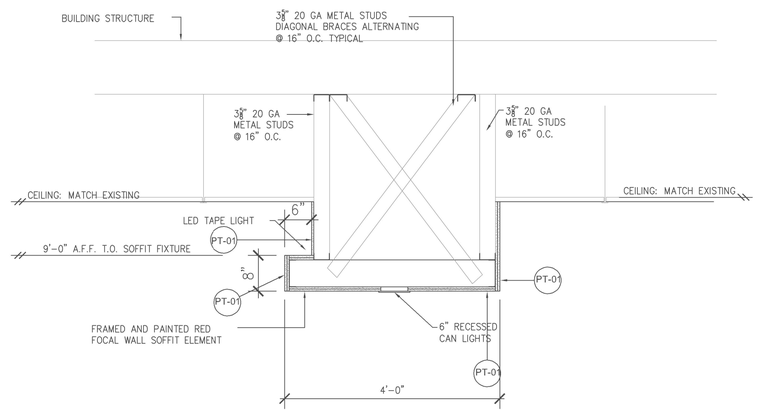

5 A2.1 SOFFIT SECTION
SCALE: 3/4" = 1'-0"

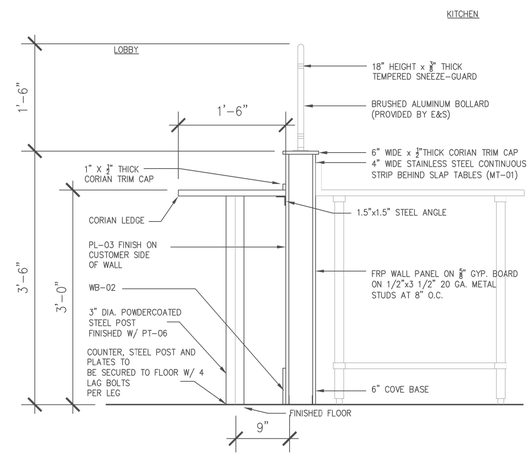

4 A2.1 HALF WALL SECTION
SCALE: 1" = 1'-0"

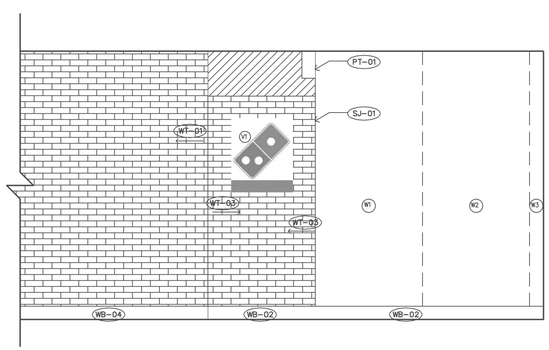

3 A2.1 INTERIOR WALL ELEVATION
SCALE: 3/8" = 1'-0"

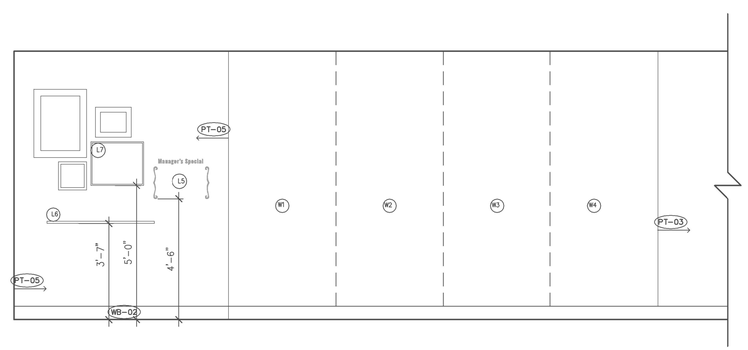

2 A2.1 INTERIOR WALL ELEVATION
SCALE: 3/8" = 1'-0"

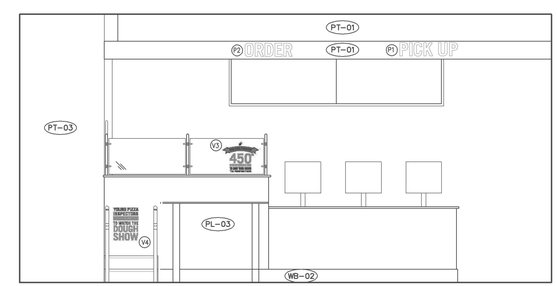

1 A2.1 INTERIOR WALL ELEVATION
SCALE: 3/8" = 1'-0"

John F. Heltzel AIA
A PROFESSIONAL CORPORATION
9389 FORESTWOOD LANE
MANASSAS, VIRGINIA 20110
PHONE: 703.748.8801
WWW.HELTZELAIA.COM

DOMINIO'S STORE #4373
8068 ROLLING RD
SPRINGFIELD, VA 22153
INTERIOR ELEVATIONS AND DETAILS

COMMONWEALTH OF VIRGINIA
JOHN F. HELTZEL
Certificate No. 7387
Digitally signed by John Heltzel
Date: 2019.11.11 15:04:37 -05'00'

DATE:	11/11/2019 ISSUE FOR PERMIT

SHEET
A005

COPYRIGHT JOHN F. HELTZEL AIA PC 2019

PLANS NOT FOR CONSTRUCTION UNLESS THEY ARE BEARING THE DOCUMENTED APPROVAL(S) BY THE BUILDING PERMIT DEPARTMENT OF THE APPLICABLE JURISDICTION.