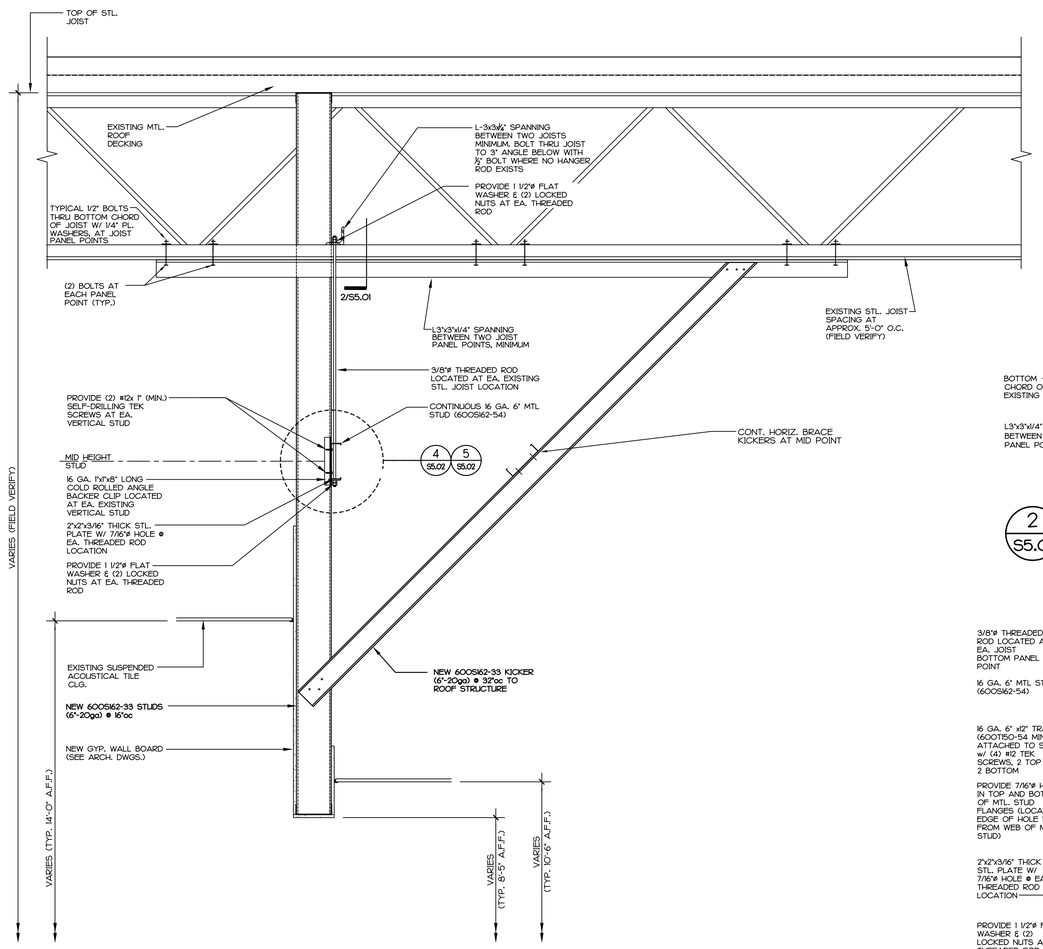

1 S5.02 SECTION AT NEW HEAD WALL (HEAD WALL PERPINDICULAR TO JOISTS)

N.T.S.

SEE 9/S5.01 FOR JOIST STIFFENERS AT NEW LOADS ON EXISTING JOISTS.

DELI/BAKERY

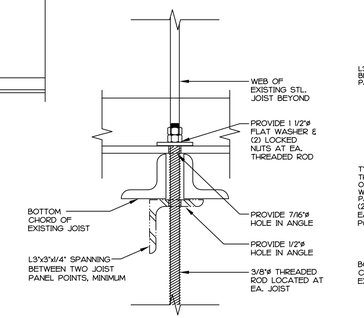

2 S5.01 CONNECTION DETAIL

3" = 1'-0"

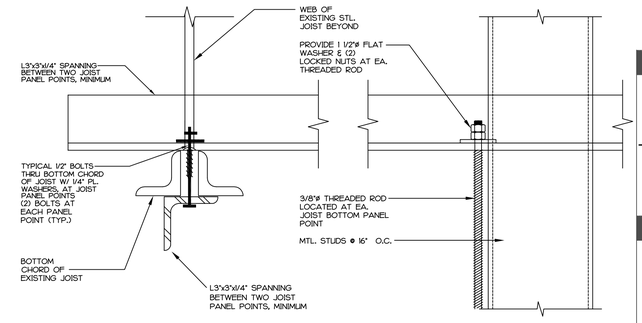

3 S5.01 CONNECTION DETAIL

3" = 1'-0"

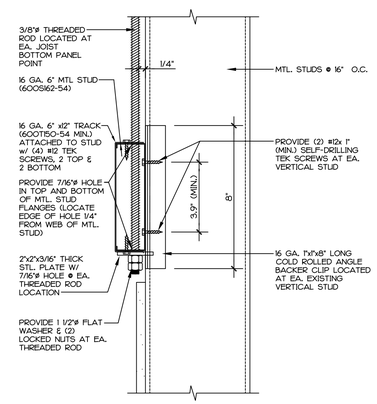

4 S5.01 CONNECTION DETAIL

3" = 1'-0"

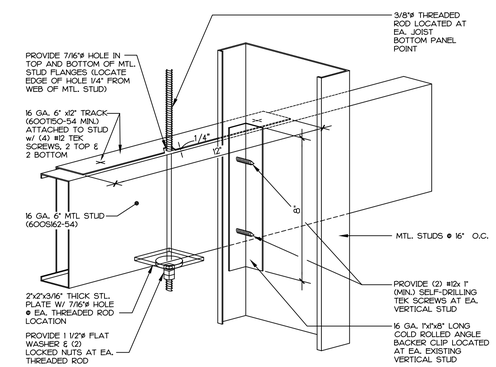

5 S5.01 CONNECTION DETAIL

N.T.S.

YCH ARCHITECTS

Architecture
Interior Design
Land Planning
Project Management

ARP ENGINEERING
CONSULTING ENGINEERS

202 EAST FRANKLIN STREET, SUITE A
PO BOX 587 · MONROE · NC 28111
(704) 233-0079

Professional Seals

"PROFESSIONAL CERTIFICATION.

I certify that these documents were prepared or approved by me, and that I am a duly licensed professional engineer under the laws of the State of Maryland, license number 29508, expiration date 10-14-2021."

STATE OF MARYLAND · DEAN ARP · No. 29508 · PROFESSIONAL ENGINEER

1.30.2020

Interior Alteration For:

FOOD LION

2110 Executive Drive, Salisbury, NC 28147/ Ph: 704.633.8250

Store No. 2501

8300 Ice Crystal Dr.
Scaggsville, MD 20723

OWNERSHIP OF INSTRUMENTS OF SERVICE:

All reports, specifications, plans, computer files, field data, notes, and other documents and instruments of service shall remain the property of the Design Professional. The Design Professional shall retain all common law, statutory and other reserved rights, including the copyright thereto.

This drawing is the property of Arp Engineering, Inc. and is not to be reproduced or copied in whole or any part. It is not to be used on any other project and is to be returned upon request.

© Copyright 2020

Project No.: 2501FLMK20

File Name: 2501S5.02_00.DWG

Date: 1-30-2020

Revisions:

STRUCTURAL DETAILS

Structural

S5.02

YCH Commission Number

19030.00

7035 Northwinds Dr NW
Concord, NC 28027
704 . 788 . 2000
ycharch.com