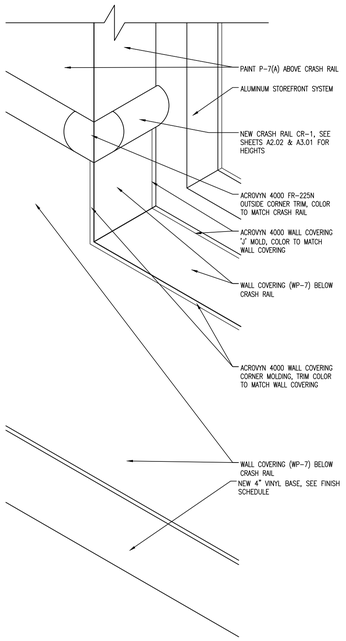

1 A5.01 DETAIL @ ALUMINUM STOREFRONT OUTSIDE CORNER TRANSITION
3" = 1'-0"

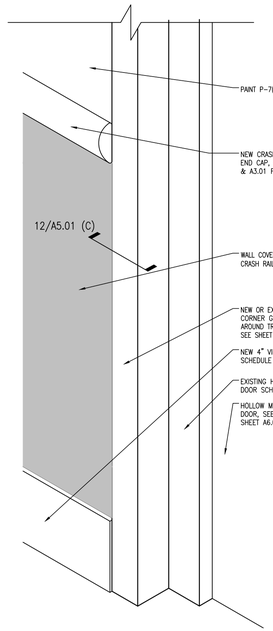

2 A5.01 DETAIL @ S.S. CORNER GUARD SURROUND
3" = 1'-0"

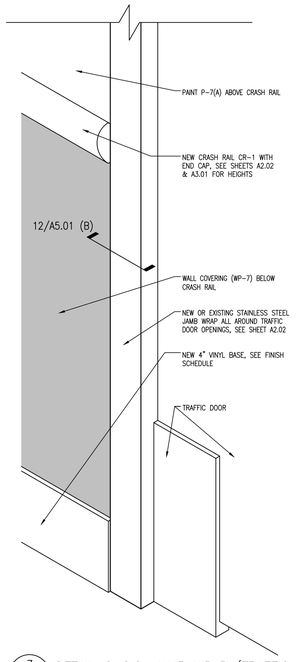

3 A5.01 DETAIL @ S.S. JAMB WRAP (TRAFFIC DOOR)
3" = 1'-0"

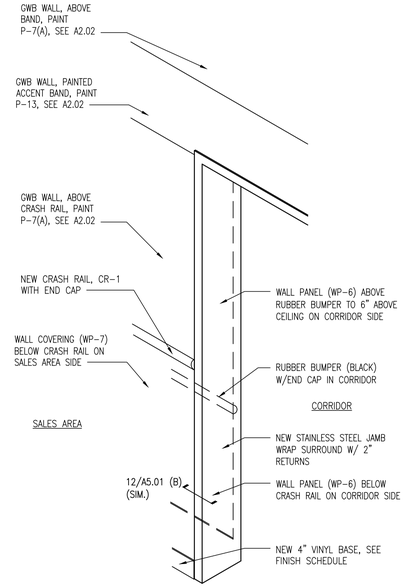

4 A5.01 DETAIL @ CORRIDOR JAMB WRAP
3/4" = 1'-0"

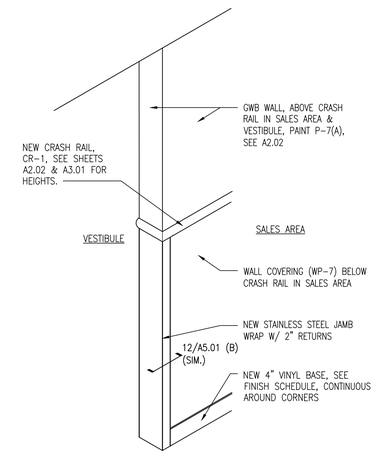

5 A5.01 DETAIL @ VESTIBULE WALL
3/4" = 1'-0"

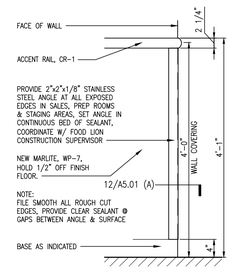

6 A5.01 CORNER GUARD
3/4" = 1'-0"

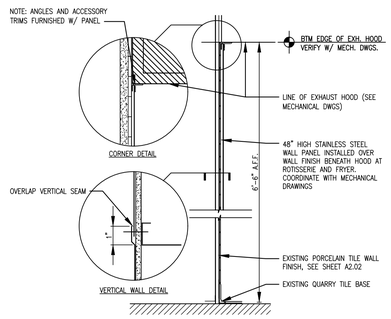

7 A5.01 STAINLESS STEEL WALL PANEL
1/2" = 1'-0"

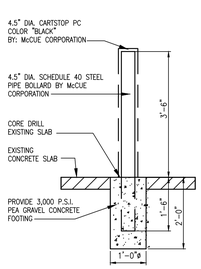

8 A5.01 INTERIOR GUARDPOST DETAIL
1/2"=1'-0"

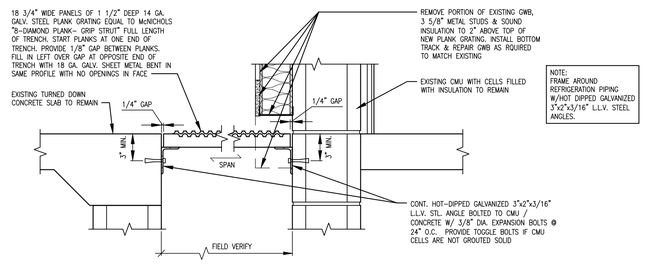

9 A5.01 TRENCH COVER DETAIL
1 1/2" = 1'-0"

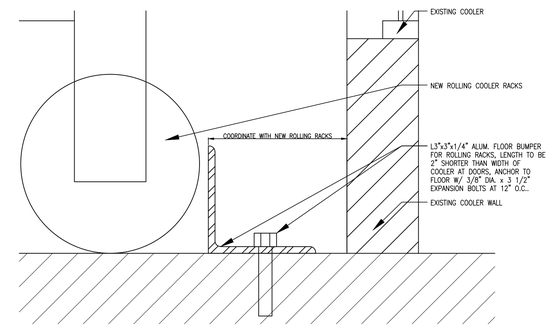

10 A3.01 DETAIL @ NEW DAIRY COOLER FLOOR BUMPER
6"=1'-0"

UTILIZE THE GUIDELINES BELOW FOR STAINLESS STEEL WRAPS, CORNER GUARDS, THRESHOLDS, ETC.

1. COLUMN WRAPS – 22 GA., FINISH #3.
2. CORNER GUARDS – 18 GA., FINISH #3. NON-HEMMED EDGES.
3. DOOR FRAME WRAPS – 18 GA., FINISH #3.
4. OVEN/HOOD FLASHING – 20 GA., FINISH #3.
5. DOOR PLATES – 18 GA., FINISH #3.
6. THRESHOLDS – 11 GA., FINISH #2B.

ALL MATERIAL IS STAINLESS STEEL AND SHALL BE PVC COVERED FOR PROTECTION DURING INSTALLATION AND CAULKING.

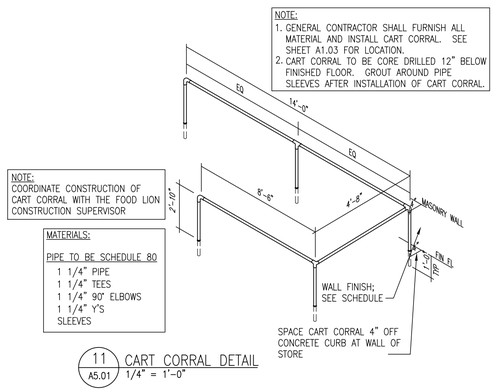

11 A5.01 CART CORRAL DETAIL
1/4" = 1'-0"

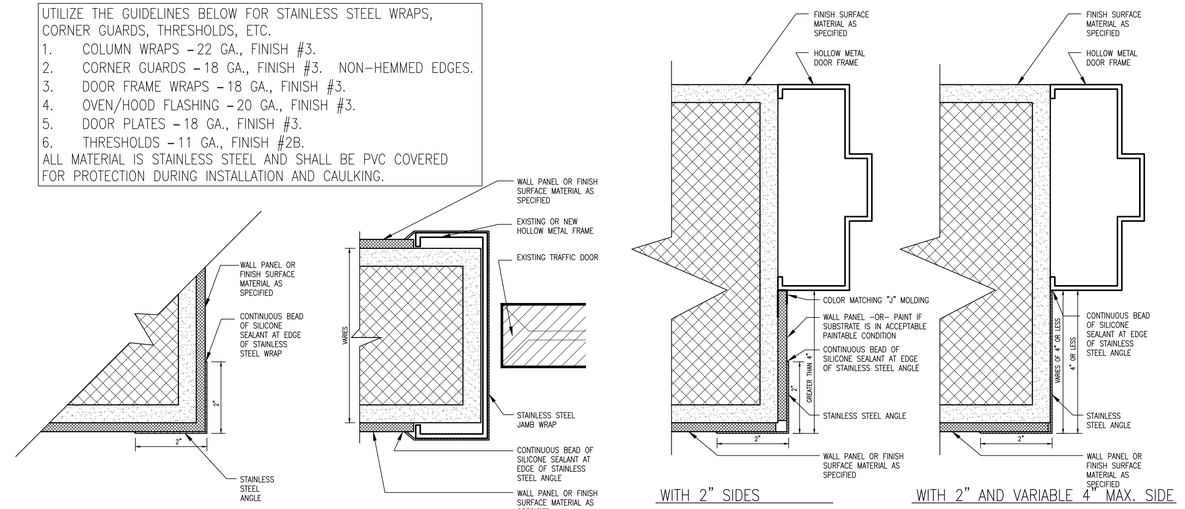

A PLAN
6"=1'-0"

B PLAN
6"=1'-0"

C PLAN
6"=1'-0"

WITH 2" SIDES

WITH 2" AND VARIABLE 4" MAX. SIDE

12 A5.01 DETAIL @ STAINLESS STEEL WRAP/ CORNER GUARD
3" = 1'-0"

Friday, February 21, 2020 5:00:47 PM E:\2019\19032.00 Food Lion 1238 New Market MD\1_Working\AutoCad\1238 A5.01_00.dwg

YCH ARCHITECTS
Yates-Chreitzberg-Hughes Architects, Corp.
Architecture
Interior Design
Land Planning
Project Management

Professional Seals

"PROFESSIONAL CERTIFICATION.

I certify that these documents were prepared or approved by me, and that I am a duly licensed architect under the laws of the State of Maryland, license number 10841, expiration date 08-30-2020."

STATE OF MARYLAND DENNIS M. YATES No. 10841 ARCHITECT
02-14-2020

Interior Alteration For:
FOOD LION
2110 Executive Drive, Salisbury, NC 28145/ Ph: 704.633.8250
Store No. 1238
11800 Old National Pike
New Market, MD 21774

OWNERSHIP OF INSTRUMENTS OF SERVICE:

All reports, specifications, plans, computer files, field data, notes, and other documents and instruments of service shall remain the property of the Design Professional. The Design Professional shall retain all common law, statutory and other reserved rights, including the copyright thereto.

This drawing is the property of Yates - Chreitzberg - Hughes Architects, Corp. and is not to be reproduced or copied in whole or any part. It is not to be used on any other project and is to be returned upon request.

© Copyright 2020

Project No.: 1238FLMK20

File Name: 1238 A5.01_00.dwg

Date: 02-14-2020

Revisions:

MISCELLANEOUS DETAILS

Architectural

A5.01

YCH Commission Number

19032.00

7035 Northwinds Dr NW
Concord, NC 28027
704 . 788 . 2000
ycharch.com