PLUMBING FIXTURE SCHEDULE

MARK	FIXTURE	MANUFACTURER/ SUPPLIER	MODEL No.	MATERIAL	SIZE	FAUCET AND DRAIN	TRAP	SUPPLIES AND STOPS	REMARKS
P-1	WATER CLOSET	AMERICAN STANDARD	#2234.001	VITROUS CHINA	ELONG. BOWL	----	----	----	SENSOR OPERATED FLUSH VALVE – AMERICAN STANDARD SELECTRONIC AC POWER
P-1 ALT	TANK TYPE WATER CLOSET	AMERICAN STANDARD	#2333.100	VITROUS CHINA	ELONG. BOWL	----	----	ANGLE STOPS	PRESSURE-ASSISTED TANK TYPE
P-1A	WATER CLOSET (HC)	AMERICAN STANDARD	#3043.001	VITROUS CHINA	ELONG. BOWL	----	----	----	SENSOR OPERATED FLUSH VALVE – AMERICAN STANDARD SELECTRONIC AC POWER
P-1A ALT	TANK TYPE WATER CLOSET (HC)	AMERICAN STANDARD	#2467.016	VITROUS CHINA	ELONG. BOWL	----	----	ANGLE STOPS	PRESSURE-ASSISTED TANK TYPE TRIP LEVER ON OPEN SIDE OF STALL (4142.800 TANK FOR RH TRIP LEVER)
P-2	URINAL	AMERICAN STANDARD	#6590.001 0.5 GPF	VITROUS CHINA	18"x28"	----	----	----	SENSOR OPERATED FLUSH VALVE – AMERICAN STANDARD SELECTRONIC AC POWER
P-3	LAVATORY	AMERICAN STANDARD	#0124.024	VITROUS CHINA	20"x18"	#7385.050 WITH #2411.015.002 GRID DRAIN	17 GA.	ANGLE STOPS	----
P-3A	LAVATORY (HC)	AMERICAN STANDARD	#0124.024	VITROUS CHINA	20"x18"	#7385.050 WITH #2411.015.002 GRID DRAIN 7723.018 OFFSET	17 GA.	ANGLE STOPS	TRUEBRO 102-EZ LAVGUARD
P-4	TWO LEVEL ELECTRIC WATER COOLER	GRAINGER ELKAY	EZSTL8C	STAIN. STEEL RECEPTOR	38"x19"	----	8.0 GPH	WHEEL HAND STOP	MOUNT ONE UNIT AT HANDICAP HEIGHT
P-4A	SINGLE WATER COOLER	GRAINGER ELKAY	EZS8	STAIN. STEEL RECEPTOR	19"x19"	----	8.0 GPH	WHEEL HAND STOP	MOUNT AT HANDICAP HEIGHT
P-5	MIXING FAUCET	AMERICAN STANDARD	#8350.243	CAST BRASS	----	----	----	VACUUM BREAKER LEVER HANDLES	----
P-6	WALL HYDRANT	ZURN	Z-1310	BRONZE	----	----	----	VACUUM BREAKER KEY CONTROL	FREEZEPROOF
P-6A			Z-1325						HW & CW, FREEZEPROOF
P-7	CAN WASH FAUCETT	T & S	#B-0665-BSTR	CHROME PLATED	----	----	----	VACUUM BREAKER INTEGRAL STOPS & WALL BRACKET WITH CHECK VALVES	----
P-8	FLOOR DRAIN	ZURN	ZB-415	CAST BRONZE STRAINER	4"	----	DEEP SEAL TRAP	BACKWATER VALVE	----
P-8A	TRENCH DRAIN	ABT, INC.	POLYDRAIN CHANNEL #100	----	----	----	DEEP SEAL TRAP	----	No. 2502 DUCTILE IRON GRATE w/825.44 VERTICAL OUTLET & CLOSED END PLATES
P-8B	TRENCH DRAIN	ABT, INC.	POLYDRAIN CHANNEL #90	----	----	----	DEEP SEAL TRAP	----	No. 2502 DUCTILE IRON GRATE w/825.44 VERTICAL OUTLET & CLOSED END PLATES
P-9	FLOOR CLEAN-OUT	SIOUX CHIEF	834-4PNR	PVC WITH NICKEL/ BRONZE TOP	4"	----	----	----	WITH BODY FLANGE REFER TO DETAIL ON SHEET P6.01
P-9A	TWO WAY CLEAN-OUT IN CONCRETE	SIOUX CHIEF	834-4PNR	PVC WITH NICKEL/ BRONZE TOP	4"	----	----	----	WITH BODY FLANGE, USE IN CONCRETE REFER TO DETAIL ON SHEET P6.01
P-9B	TWO-WAY CLEAN-OUT	JOSAM	58900 SERIES	COATED CAST IRON w/ BRONZE PLUG	4"	----	----	----	EXTERIOR WHEN IN ASPHALT. SEE DETAIL ON SHEET P6.01. WITH SIGMA 6" VBCLU18 OR EQUIVALENT. MUST MEET H_2O LOAD RATING AND IS CAST IRON
P-10	MEAT PREP SINK	JOHN BOOS	3PB244-2D24-FL	TYPE 300 STAINLESS STEEL	30"x124"	(3) B-3952 LEVER WASTE DRAIN (1) T&S B 1128 FAUCET 8" CC, 12" SPOUT	----	VACUUM BREAKER AND ANGLE STOPS	(3) 699051253 STANDOFF BRACKETS
P-11	PRODUCE PREP SINK	JOHN BOOS	3PB244-2D24-FL-1	TYPE 300 STAINLESS STEEL	29"x123"	(3) B-3952 LEVER WASTE DRAIN (1) T&S B 1128 FAUCET 8" CC, 12" SPOUT (1) T&S B 0156 ADD-A-FAUCET (1) T&S B 2278 PRERINSE w/VB	----	VACUUM BREAKER AND ANGLE STOPS	(3) 699051253 STANDOFF BRACKETS
P-12	WATER HEATER	GRAINGER RHEEM-RUDD (ELEC.)	ES85-54-G	----	85 GAL	----	----	SURFACE MOUNT THERMOSTAT	ELECTRIC WATER HEATER 54 KW 208 V, 3 PH
P-12A	WATER HEATER	GRAINGER RHEEM-RUDD (ALTERNATE GAS)	HE80-199	----	80 GAL	----	----	SURFACE MOUNT THERMOSTAT	120V CONTROL CKT SEALED COMBUSTION GAS FIRE 199 MBH INPUT
P-13	WATER HEATER (PREHEATER)	GRAINGER THERMA-STOR (RECLAIM)	TS III - 1	----	120 GAL	----	----	----	6000 WATT ELEMENT WITH STAND
P-14	SEAFOOD & MEAT PREP HAND SINK	JOHN BOOS	PBHS-W-1620KVFL	TYPE 300 STAINLESS STEEL	25"x22"	005439 BASKET DRAIN T&S B 0509 KNEE VALVE T&S B 0525 SM BASE	----	----	----
P-15	DELI-BAKERY SINK	JOHN BOOS	3PB24304-2D24FL	TYPE 300 STAINLESS STEEL	29"x123"	(3) B-3952 LEVER WASTE DRAIN (2) T&S B 1128 FAUCET (1) T&S B 2278 PRERINSE w/VB	----	VACUUM BREAKER AND WALL BRACKET	----
P-16	GREASE TRAP	--	--	--	MINIMUM 1,500 GALLONS	----	----	EXTERIOR	RECESSED HEAVY TRAFFIC RATED
P-17	FLOOR DRAIN	ZURN	Z-560	CAST IRON	4"	----	DEEP SEAL TRAP	----	----
P-18	FLOOR DRAIN	ZURN	ZB-610-H W/Z1000	CAST BRONZE GRATE	12"x12"	----	DEEP SEAL TRAP	----	HINGED GRATE WITH SEDIMENT BUCKET
P-19	FLOOR DRAIN	ZURN	ZB-508-HP W/Z1000	CAST BRONZE GRATE	9"	----	DEEP SEAL TRAP	----	HEEL PROOF SECURED GRATE
P-20	WALL CLEANOUT	JOSAM	58890	BRONZE PLUG STAINLESS WALL PLATE	----	----	----	----	----
P-21	PRODUCE PREP HAND SINK	JOHN BOOS	PBHS-W-1620-FL	TYPE 300 STAINLESS STEEL	25"x22"	005439 BASKET DRAIN T&S B 1146 FAUCET OPTIONAL 4" WRIST ACTION	----	WALL BRACKET	----
P-22	WATER HAMMER ARRESTER	JR SMITH	SERIES 5000	----	----	----	----	----	----
P-23	FLOOR SINK	PLASTIC ODDITIES	PFS 300 T	----	14"X14"	----	----	14"x14" W/ 12"ø ROUND GRATE	SECONDARY STRAINER
P-24	MOP BASIN	REDICO	5596-363606-8020	RUBER GASKET FIBERGLASS	36"x36"	3" GRID DRAIN AND RUBBER GASKET	DEEP SEAL TRAP	VACUUM BREAKER	W/ 24" WALL GUARDS SEE SUPPLIER INFO
P-24A	MOP BASIN	FIAT	TSB-500 SERIES	RUBER GASKET TERRAZZO	36"x36"	3" GRID DRAIN, RUBBER GASKET 830-AA SERVICE FAUCET	DEEP SEAL TRAP	VACUUM BREAKER	10" DEEP W/ 24" WALL GUARDS SEE SUPPLIER INFO
P-25	WATER HEATER	RHEEM-RUDD	EGSP-10	----	10 GAL	----	----	----	(1) 3000 WATT ELEMENT, 120V, 1PH
P-26	1 COMPARTMENT D/B CHICKEN SINK AND SEAFOOD SINK	JOHN BOOS	1PB184-1D18R-FL	TYPE 300 STAINLESS STEEL	24"x41"	B-3952 LEVER WASTE DRAIN T&S B 1128 FAUCET	----	VACUUM BREAKER AND WALL BRACKET	18" SPLASHGUARD
P-27	2 COMPARTMENT VEGETABLE SINK	JOHN BOOS	2PB244-1D24R-FL	TYPE 300 STAINLESS STEEL	30"x77"	B-3952 LEVER WASTE DRAIN T&S B 1128 FAUCET	----	VACUUM BREAKER AND WALL BRACKET	24" SPLASHGUARD
P-28	DELI/BAKERY HAND SINK	JOHN BOOS	PBHS-W-1620KVFL	TYPE 300 STAINLESS STEEL	25"x22"	005439 BASKET DRAIN T&S B 0509 KNEE VALVE T&S B 0525 SM BASE	----	----	----
P-29	ROOF DRAIN	ZURN	Z-100	CAST IRON	4"	----	----	----	CAST IRON DOME
P-30	HOSE BIBB	WOODWARD	MODEL 24	POLISHED CHROME	----	----	----	CHROME VACUUM BREAKER	CHROME STANDARD LOOSE KEY
P-31	LOUNGE SINK AND COUNTER	JOHN BOOS	BRC-5024-HWR-FL	16 GAUGE STAINLESS STEEL	50"x24"	005439 BASKET DRAIN T&S B 0325 FAUCET	----	----	----
P-32	EXPANSION TANK	B&G	PTA-12	----	6.4 GAL	----	----	----	----
P-32A	EXPANSION TANK	B&G	PTA-5	----	2.0 GAL	----	----	----	----
P-32B	EXPANSION TANK	B&G	PTA-20V	----	8.0 GAL	----	----	----	----
P-33	EMER. EYEWASH UNIT WITH BRACKET	BRADLEY	S19-220 WITH THERMOSTATIC MIXING VALVE S19-2000	----	----	----	----	----	SEE DETAIL ON SHEET P6.01
P-33A	DECK MOUNTED EYEWASH	GUARDIAN	G1805-TM	----	----	----	----	----	PROVIDE THERMOSTATIC MIXING VALVE
P-34	TRAP PRIMER	PRECISION PLUMBING	MPB-500	----	----	3/8" TYPE L SOFT TUBING	----	----	MOUNTED A MINIIMUM 12" AFF ENSURE PRIMER IS MOUNTED IN AN AREA ACCESSIBLE FOR SERVICE
P-35	RECESSED WALL HYDRANT	WOODWARD	B65	BRASS	3/4"	----	----	----	LOOSE KEY FREEZEPROOF, LOCKING COVER

NOTES:
1. THE COLOR FOR ALL WATER CLOSETS, URINALS AND LAVATORIES SHALL BE "WHITE."
2. P-33 EMERGENCY EYE WASH STATION AND S19-2000 MIXING VALVE PROVIDED BY FOOD LION AND INSTALLED BY PLUMBING CONTRACTOR AT 36" AFF. FLOOR DRAIN NOT REQUIRED.
3. VTR'S SHALL BE A MINIMUM OF 10' FROM ANY FRESH AIR INTAKE, COORDINATE AS REQUIRED WITH MECHANICAL CONTRACTOR AND MECHANICAL ROOF PLAN.

FIXTURE NOTE:
FOR PLUMBING FIXTURES MARKED P-10, P-11, P-14, P-15, P-21 & P-22 THE SINK TUBS SHALL BE FABRICATED WITH 16 GAUGE STAINLESS STEEL & THE DRAIN BOARDS SHALL BE FABRICATED WITH 14 GAUGE STAINLESS STEEL. SEE THE 'FOOD LION' SINK SPECIFICATION FOR MORE INFORMATION.

ACCEPTABLE ALTERNATE MANUFACTURERS:

- P-1 TOTO CT705EN; KOHLER K-4350
- P-1A TOTO CT705ELN; KOHLER K-4368
- P-2 TOTO UT447E (0.5 GPF); KOHLER K-4940-ET (0.5 GPF)
- P-3 TOTO LT307.4; KOHLER K-2054
- P-4 HALSEY TAYLOR WM-16W
- P-5 KOHLER K-8906
- P-6 SMITH 5609-QT; WOODFORD MODEL 60; WADE W-8620-L; JOSAM 71050-50; WATTS HY420-6
- P-6A SMITH 5560; WADE W-8606-HC; JOSAM 71650-52-80; WATTS HY420-6
- P-7 AMERICAN STANDARD 8344-111
- P-8 SMITH 2005-DV-PB; WADE W-1104-TS7-31-2; JOSAM 30004-7EJ-2; WATTS FD-100-A7-8
- P-8A J.R. SMITH D9930 – SYSTEM
- P-8B J.R. SMITH D9930 – SYSTEM
- P-17 JOSAM 39964 w/67104A; WATTS FD-460-F-9; WADE W-1640
- P-18 SMITH 2415-B-PB; WADE W-2310-1-14 W/2450; JOSAM 37810-20-14-Z w/67104A; WATTS FD-460-F-5-9
- P-19 JOSAM 32300-1.88100; SMITH 2120; WATTS FD-320-Y-6; WADE W-1310-1-W/ W-2450
- P-20 WATTS CO-590-RD; WADE W-8590/ W-8480R
- P-23 SIOUX CHIEF 861.3PX
- P-29 WATTS RD-300K

LOCATION & PHONE FOR FIXTURE SUPPLIERS:		
PLASTIC ODDITIES	SHELBY, NC	PH:(800) 438-5327
JOHN BOOS (HEFCO, LLC)	ROSWELL, GA.	PH:(800) 327-1817
GRAINGER	CHARLOTTE, NC	PH:(704) 904-6151
JOSAM	RICHMOND, VA	PH:(800) 446-2728
THERMA-STOR	DEC INTERNATIONAL	PH:(800) 533-7533
ABT, INC.	TROUTMAN, NC	PH:(800) 438-6057 OR (704) 525-3043
WATTS	SPINDALE, NC	PH:(800) 338-2581
WADE	CHARLOTTE, NC	PH:(704) 525-3043
B&G	MORTON GROVE, IL	PH:(847) 966-3700

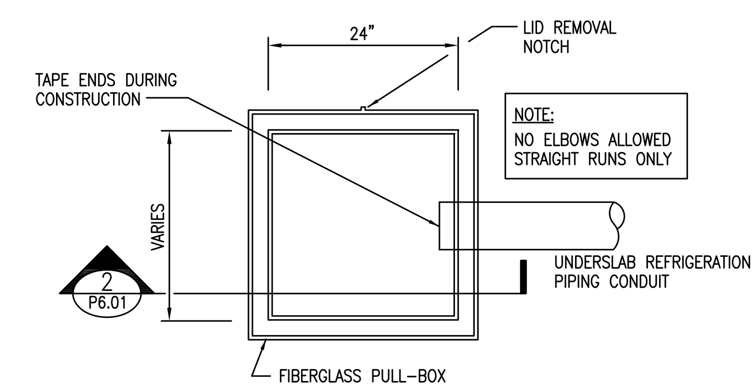

1 P6.01 ACCESS PIT PLAN VIEW
NOT TO SCALE

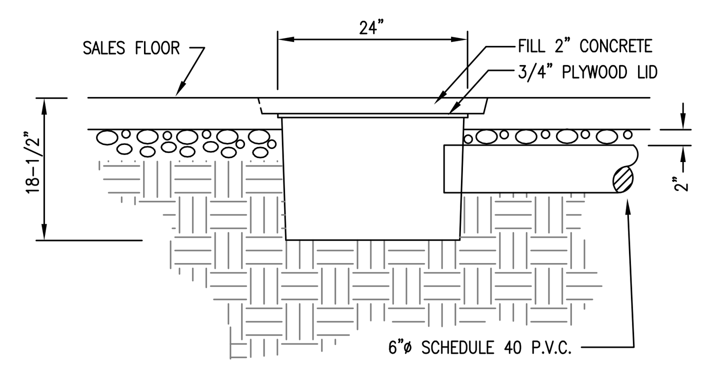

2 P6.01 SECTION THRU PIT
NOT TO SCALE

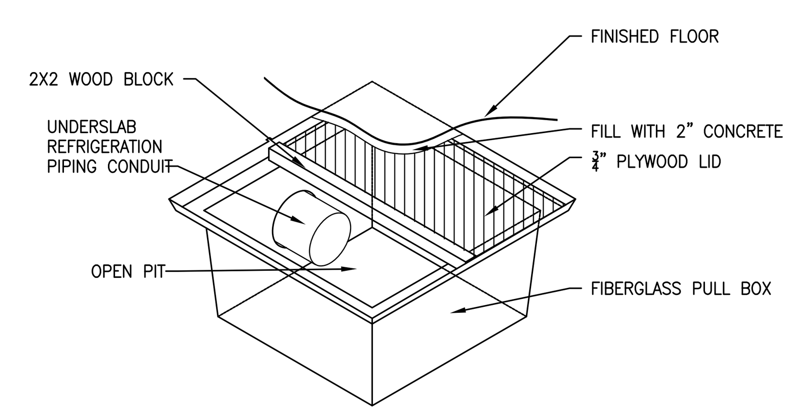

3 P6.01 PIT ISOMETRIC
NOT TO SCALE

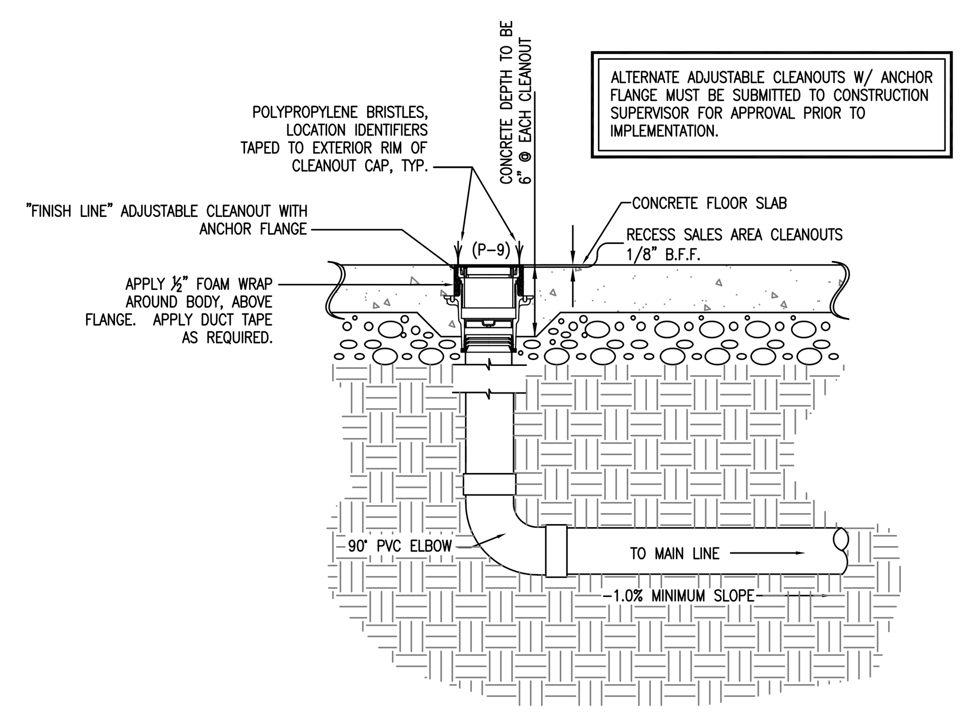

4 P6.01 SALES AREA CLEANOUT SECTION
NOT TO SCALE

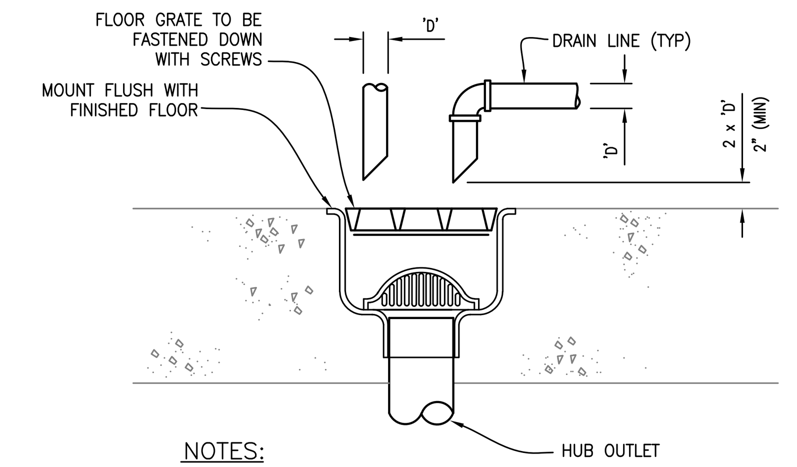

NOTES:
A. FLOOR SINK COVER TO BE FLUSH WITH TILE OR FLUSH WITH CONCRETE FLOOR IN AREA WITH NO TILE.
B. PROVIDE ONE DRAIN LINE FOR EACH BASIN FOR MULTI-BASIN PREP SINKS. NO MANIFOLDS PERMITTED.

5 P6.01 FLOOR SINK DETAIL
NOT TO SCALE

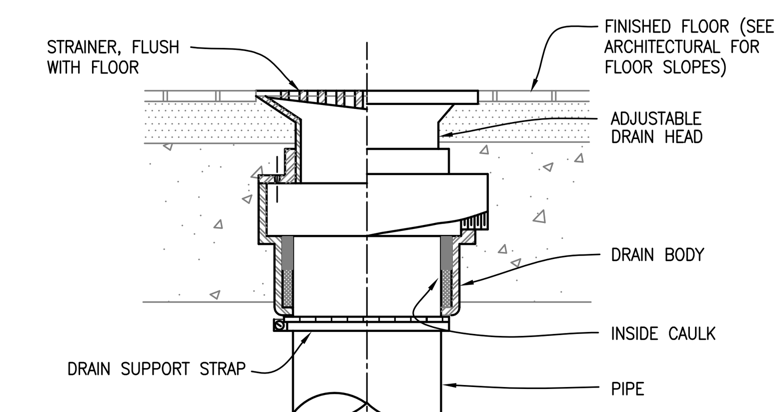

NOTE:
A. FLOOR DRAIN COVER TO BE FLUSH WITH TILE OR FLUSH WITH CONCRETE FLOOR IN AREA WITH NO TILE.

6 P6.01 FLOOR DRAIN DETAIL
NOT TO SCALE

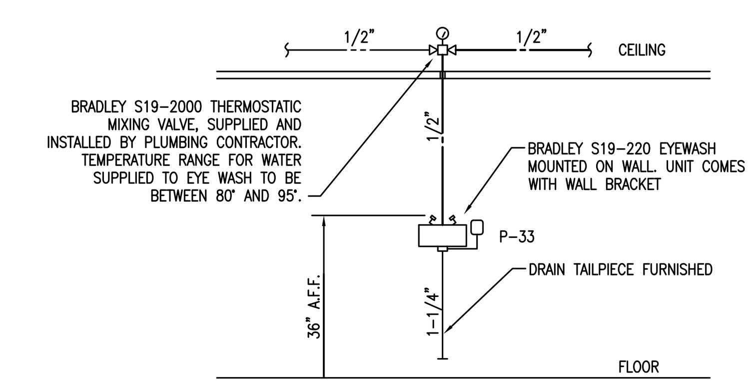

7 P6.01 EYEWASH DETAIL
NOT TO SCALE

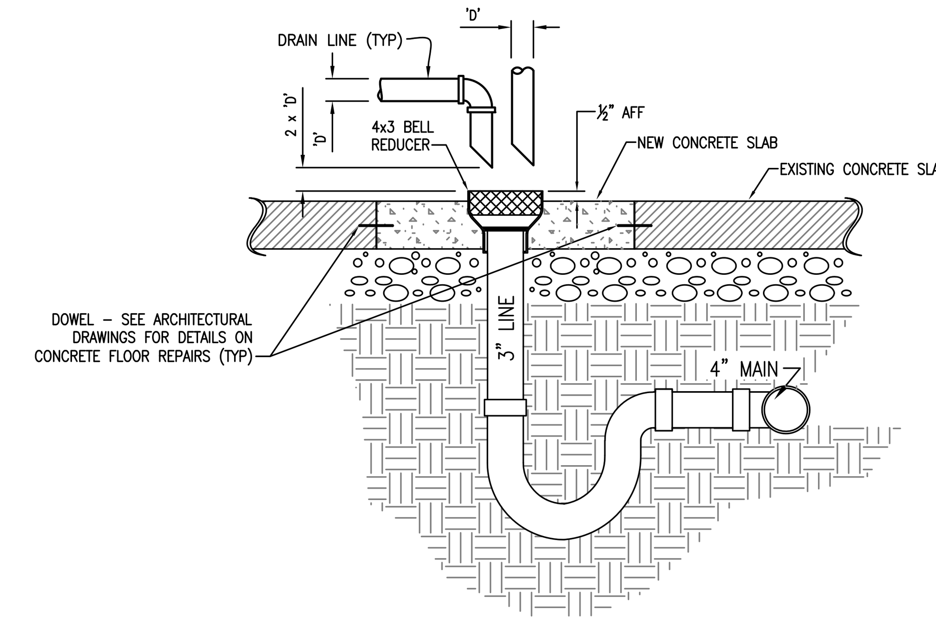

8 P6.01 HUB DRAIN INSTALLATION DETAIL
NOT TO SCALE

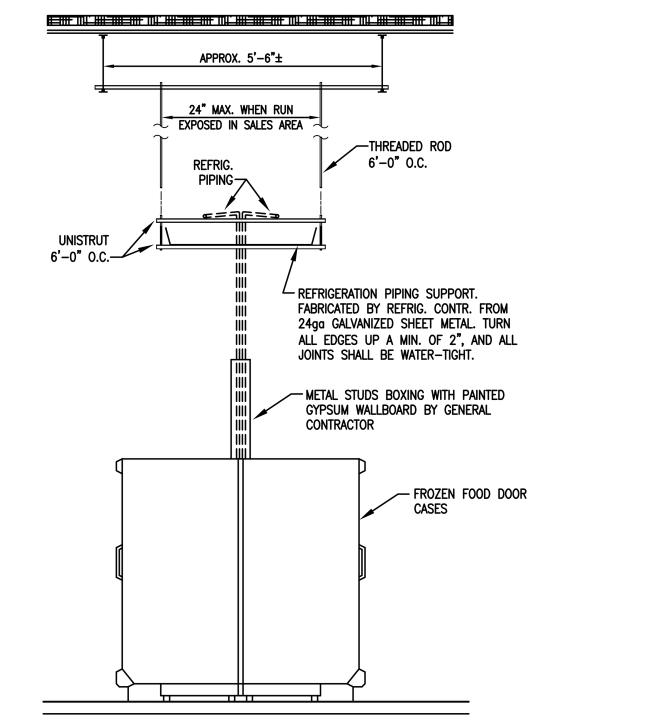

9 P6.01 OVERHEAD REFRIGERATION PIPING DETAIL
NOT TO SCALE

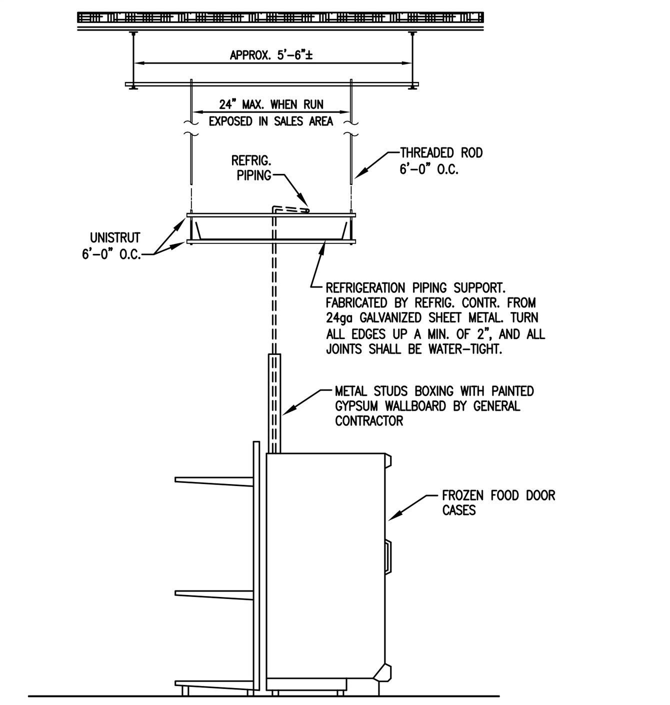

10 P6.01 OVERHEAD REFRIGERATION PIPING DETAIL
NOT TO SCALE

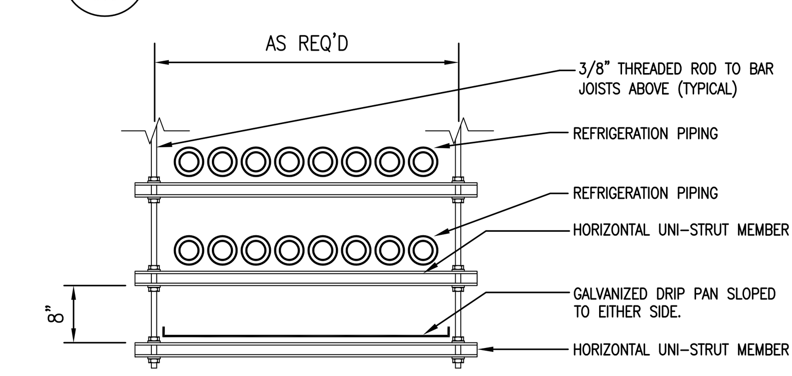

11 P6.01 OVERHEAD REFRIGERATION DRIP PAN DETAIL
NOT TO SCALE

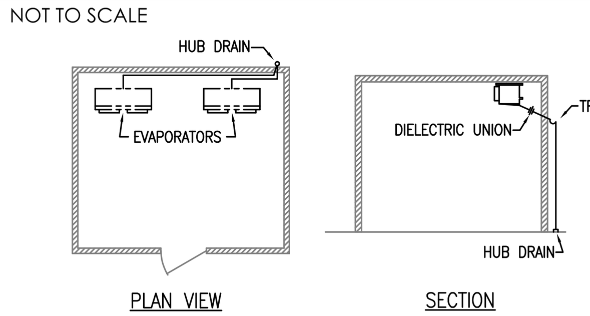

CONDENSATE DRAIN NOTES	
1.	CONDENSATE DRAIN LINES TO BE 3/4" MIN. TYPE 'M' COPPER WITH 1 1/2" MINIMUM STANDOFFS FROM WALL, BY PLUMBING CONTRACTOR.
2.	CONDENSATE DRAIN LINES FROM FREEZERS TO HAVE EASY HEAT COPPER TUBE HEATER 20 WATTS PER LINEAR FT. 120 V AC OR APPROVED EQUAL. TAPE INSTALLATION BY REFRIGERATION CONTRACTOR.
3.	CONDENSATE DRAIN LINES SHALL LEAVE FREEZERS AT 45° ANGLE THROUGH WALL.
4.	INSTALL ONE HANGER PER EVAPORATOR DRAIN IN THE PRODUCE & MEAT PREP. ROOMS.
5.	SLOPE IN COOLER 1/4"/FOOT TO HUB DRAIN. SLOPE IN FREEZER 3"/FOOT TO HUB DRAIN.
6.	EACH EVAPORATOR SHALL HAVE ITS OWN DRAIN LINE RUNNING TO HUB DRAIN.

12 P6.01 TYPICAL CONDENSATE DRAINS
NOT TO SCALE

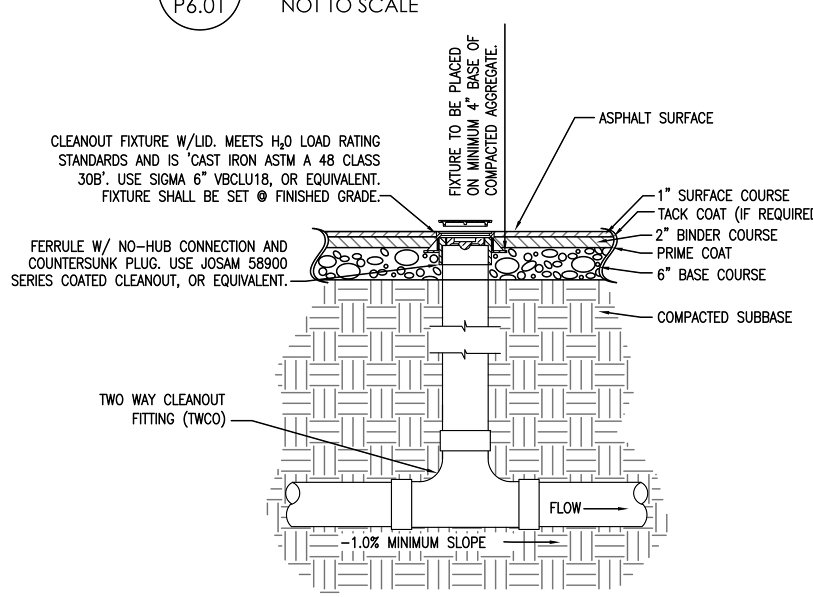

13 P6.01 TWO WAY CLEANOUT SECTION IN ASPHALT
NOT TO SCALE

YCH ARCHITECTS
Yates-Chreitzberg-Hughes Architects, Corp.
Architecture
Interior Design
Land Planning
Project Management

BOWERS CONSULTING, PA
1620 South MLK, Jr. Avenue - Suite 106
Salisbury, NC 28144
T: 704-630-0075 F: 704-630-0051

Professional Seals

"PROFESSIONAL CERTIFICATION

I hereby certify that these documents were prepared or approved by me, and that I am a duly licensed professional engineer under the laws of the state of Maryland, License No. 41658, expiration date: 02/19/2022."

STATE OF MARYLAND MICHAEL D. BOWERS 41658 PROFESSIONAL ENGINEER
02/14/2020

Interior Alteration For:
FOOD LION
2110 Executive Drive, Salisbury, NC 28145/ Ph: 704.633.8250
Store No. 1238
11800 Old National Pike
New Market, MD 21774

OWNERSHIP OF INSTRUMENTS OF SERVICE:
All reports, specifications, plans, computer files, field data, notes, and other documents and instruments of service shall remain the property of the Design Professional. The Design Professional shall retain all common law, statutory and other reserved rights, including the copyright thereto.
This drawing is the property of Yates - Chreitzberg - Hughes Architects and is not to be reproduced or copied in whole or any part. It is not to be used on any other project and is to be returned upon request.
© Copyright 2020

Project No.: 1238FLMK20
File Name: 1238 P6.01_00.dwg
Date: 02-14-20
Revisions:

PLUMBING SCHEDULE

Plumbing
P6.01
YCH Commission Number
19032.00

7035 Northwinds Dr NW
Concord, NC 28027
704 . 788 . 2000
ycharch.com